Öhlins shock absorber

TTX22m.2

Owner's Manual

ÖHLINS

Öhlins Group AB | Our Story

In the 1970s, a young man named Kenth Öhlin spent most of his free time on the track, pursuing his favorite sport: motocross.

Being a careful observer, there was one detail that kept catching Kenth's attention: motocross bikes had more engine power than their suspension could handle. It wasn't long before Kenth realized that improving the wheel suspension could lead to better overall performance – and the rest is history.

Öhlins was founded in 1976, and just two years later, the company won its first World Championship title. Now, after 50 years in the business, Öhlins is still rooted in motorsport heritage, driven by a passion for performance and innovation.

Developed, Tested, and Perfected for Your Ride

Congratulations on your new Öhlins product! Backed by over 450 World Championship victories and countless other major titles, our products offer proven performance and reliability.

Every Öhlins product undergoes rigorous testing. Our engineers spend thousands of hours developing products, drawing on five decades of racing experience to achieve the perfect balance of precision, durability, and ride quality.

By choosing Öhlins, you've made a clear statement: you're a genuine riding or driving enthusiast who demands the best possible performance from your vehicle. You don't settle for anything less than exceptional handling ability and confidence-inspiring feedback that turns every ride into an experience.

Your Öhlins product is pure racing pedigree, engineered to endure and deliver ultimate comfort and performance – wherever your ride takes you.

SAFETY PRECAUTIONS

General Warnings

Note!

The shock absorber/front fork/steering damper is an important part of the vehicle and will affect the stability.

Note!

Read and ensure you understand the information in this manual and other technical documents provided by Öhlins, before using the product.

Note!

Öhlins Group AB can not be held responsible for any damage to the shock absorber/front fork/steering damper, vehicle, other property or injury to persons, if the instructions for mounting, usage and maintenance are not followed exactly.

⚠ Warning!

After installing the Öhlins product, take a test ride at low speed to ensure your vehicle has maintained stability.

⚠ Warning!

If the suspension makes an abnormal noise, or the function is irregular, or if you notice any leakage from the product, stop the vehicle immediately and return the product to an Öhlins dealer.

⚠ Warning!

The product warranty shall only apply if the product has been operated and maintained in accordance with recommendations in this manual. If you have any questions regarding usage, service, inspection and/or maintenance please contact Öhlins.

⚠ Warning!

This product was developed and designed exclusively for a specific vehicle model and shall only be installed on the intended vehicle model in its original condition as delivered from the vehicle manufacturer.

SAFETY SYMBOLS

In this manual, mounting instructions and other technical documents, important information concerning safety is distinguished by the following symbols:

⚠

The Safety Alert Symbol means: Warning! Your safety is involved.

⚠ Warning!

The Warning Symbol means: Failure to follow warning instructions can result in severe or fatal injury to anyone working with, inspecting or using the shock absorber, or to bystanders.

Caution!

The Caution Symbol means: Special precautions must be taken to avoid damage to the product.

Note!

The Note Symbol indicates information that is important regarding procedures.

Note!

When working with the Öhlins product, always read the vehicle service manual.

Note!

This manual shall be considered as a part of the product and shall accompany the product throughout its life cycle.

© Öhlins Group AB. All rights reserved.
Any reprinting or unauthorized use without the written permission of Öhlins Group AB is prohibited.

CONTENTS

In this manual

Design.....3
Spring preload 6
Compression and rebound.....7
Setting up your bike 8
Inspection and Maintenance 10

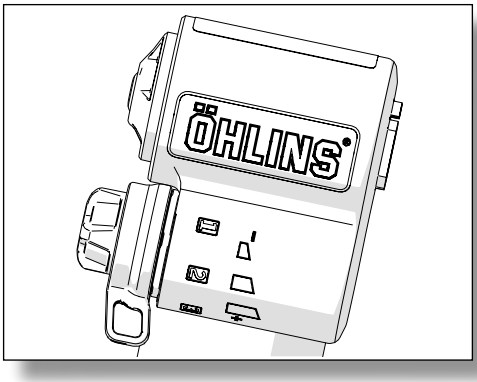

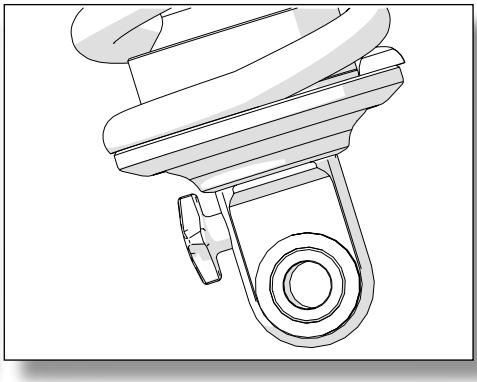

DESIGN

Congratulations on choosing the Öhlins TTX22m.2 bike shock absorber - the most unique high-performance racing shock absorber available today. This shock absorber design is the culmination of two decades of Öhlins successful participation in World Championship events.

This shock absorber draws on all the expertise developed by Öhlins while winning more than two hundred World Championships.

The TTX22m.2 shock absorber is designed to handle the most challenging World Cup Downhill tracks while still providing a pedal efficiency for the flat and uphill sections.

The Öhlins TTX22m.2 features a patented concept with a unique twin tube design that allows for the gas pressure to always back-up the low-pressure side of the piston to keep pressure at a controlled level. This ensures consistent damping performance on all types of terrain and improves damping response to give outstanding control of the bike and tire movements.

As a rider you will experience improved traction, riding comfort and control which gives the confidence and possibility to go faster down the track or up the hill.

The twin tube design also gives the possibility to have totally separated adjusters for compression and rebound damping.

Temperature stability is maintained by using a flow restriction design in the bleed valves, that creates a turbulent flow at very low piston velocities. Also, materials with different thermal expansion rates are used to compensate for the viscosity change in the fluid due to temperature changes.

The Öhlins shim system offers infinite combinations of shim stacks with a wide spectrum of different character using the same piston.

The whole system is pressurized by nitrogen gas behind a bladder to ensure gas and fluid being separated.

DESIGN

Inside the shock absorber

When the shock absorber moves, the fluid inside is forced to flow through two types of orifices, bleed valves and shim valves;

Bleed valves (Fig.1), small orifices that create a flow restriction simply by being small and **shim valves** (Fig.2) where fluid pressure has to deflect thin steel washers (shims) to open up an orifice to allow fluid to flow through it. To control damping force the bleed valves can be changed in size by the external adjusters, compression and rebound.

The characteristics of the damping action can be changed by changing the size of the shim stack (number, thickness, diameter and shape) on the shim valve.

Note!

Only authorized service centers must make changes of the shim stack.

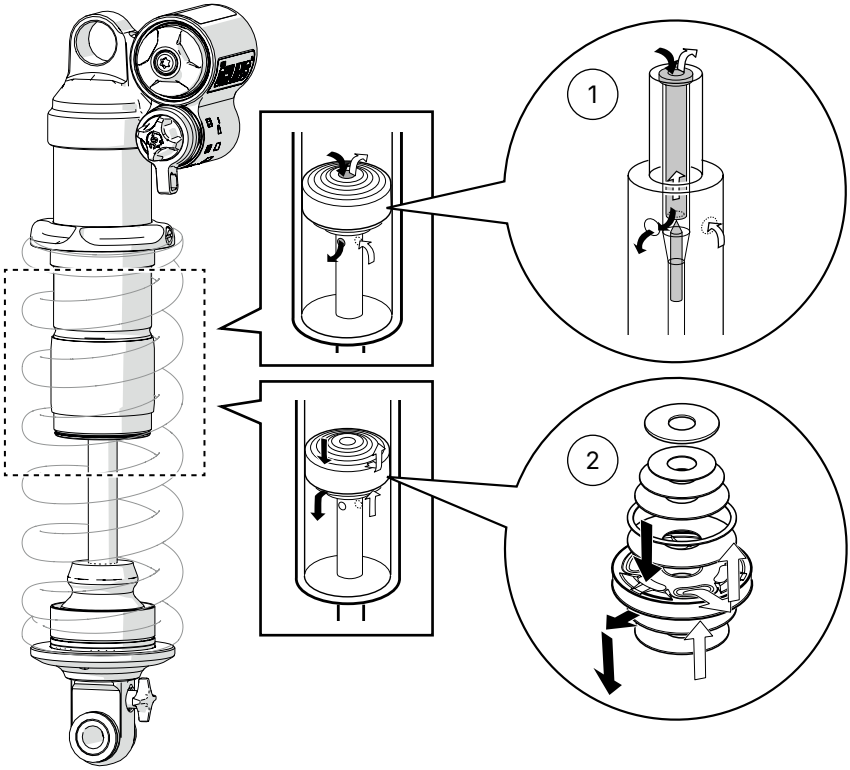

DESIGN

Compression Damping

When movement of the bike causes compression of the shock absorber, (Fig. 3) the fluid above the piston is pressurized, and needs to move. The fluid then has three different escape routes:

1. Piston compression shim valve
2. Compression adjuster bleed valve
3. Compression adjuster shim valve

The fluid will at every compression movement flow through all these routes but at low damper velocities, the percentage going through the bleed is higher, and at higher velocities the shim valves take care of most of the flow. The TTX twin tube concept offers more adjustability from the compression valve without increasing internal pressures due to its optional flow path.

During compression movement, the piston rod volume is entering the main body and the corresponding volume of damper fluid has to flow into the reservoir through the compression valve, the bladder compresses, resulting in an increased gas pressure.

Rebound Damping

When the spring forces the shock absorber to extend again (Fig. 4), the fluid below the piston is pressurized and forced to move. Due to the check valve design all flow will go through the piston where the flow takes two different routes:

1. Rebound adjuster bleed valve
2. Piston rebound shim valve

This helps to increase rebound adjustment range which makes it easier to set up the shock absorber for a wide variety of spring stiffness's and rider preferences without the need to change the rebound shim stack. The fluid that was displaced into the reservoir during compression movement is now pushed back into the main body by the gas pressure.

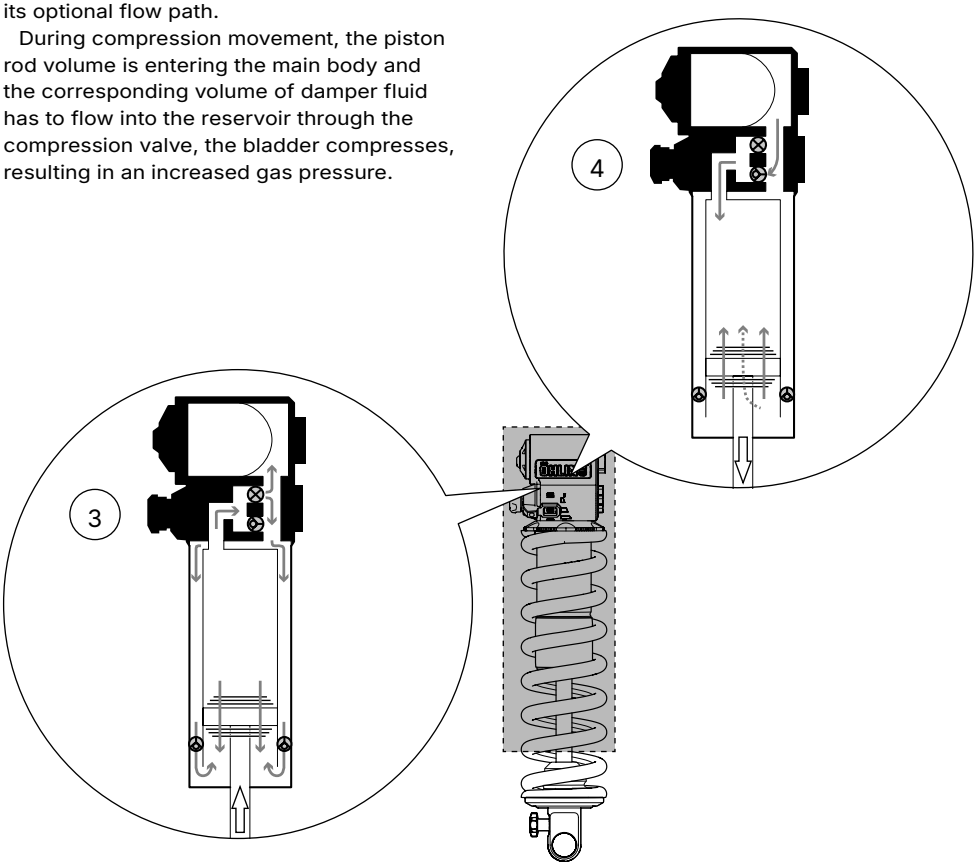

SPRING RATE

When you change the spring rate or adjust the spring preload by moving the spring seat, you will lower or raise the bike ride height.

The sag is essential for the function of the suspension. If you use a spring with incorrect spring rate or the preload is incorrectly set, any other adjustments will not help to get the intended performance from the suspension.

Change spring and set spring preload

1

Loosen the plastic stop screws and turn the spring seat to move it towards the cylinder head.

2

Push the spring clip up to access and remove the circlip.

3

Remove the spring and replace it with one with the proper spring rate.

4

Install the spring clip. Be careful not to damage the rebound adjuster while removing spring and circlip.

5

Turn the spring seat against the spring. Preload the spring a maximum of 2 full turns. Gently tighten the plastic stop screws to lock the adjuster in place.

Note!

Very low torque is required to achieve the required function.

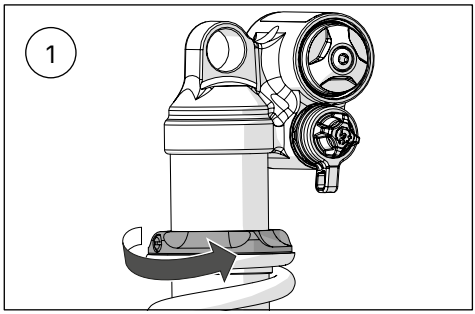

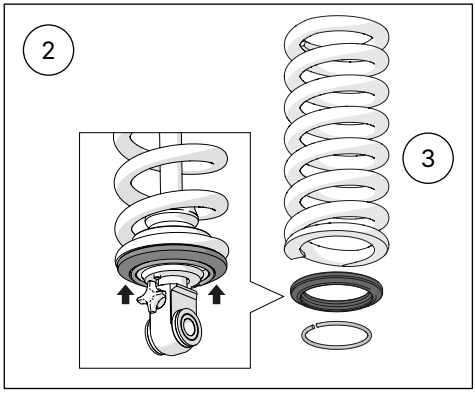

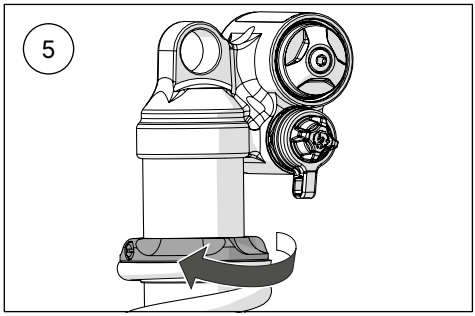

ADJUST THE DAMPER

Adjust the damper

1

Release the two screws (00828-04/05) under the bump rubber.

2

Add stroke spacers and use the right screws to tighten, se table below. Tighten the screws 0.7Nm. Use blue Loctite 243.

Travel	Stroke spacer (18099-01)	Screw (x2)
-0	0	00828-04 (8 mm)
-2.5	1	00828-04 (8 mm)
-5	2	00828-05 (12 mm)
-7.5	3	00828-05 (12 mm)

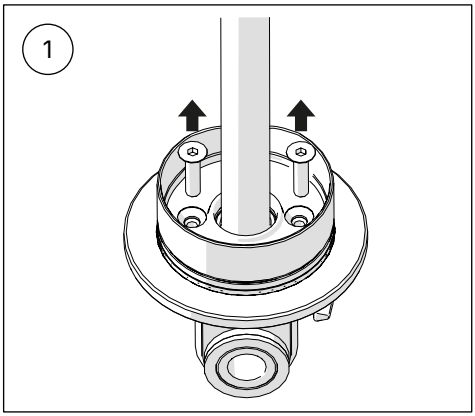

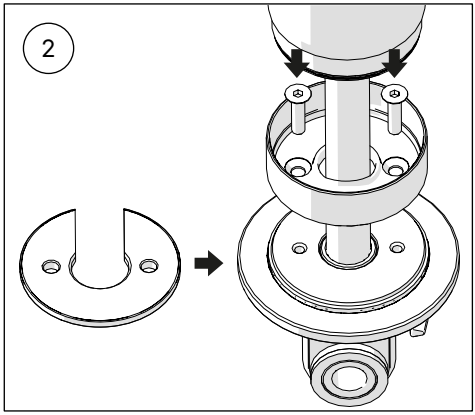

COMPRESSION AND REBOUND

Compression damping controls the energy absorption when the shock absorber is being compressed, thus controls how easily the shock absorber compresses when you hit a bump.

Rebound damping controls the energy absorption when the shock absorber is being extended and controls how fast the shock absorber returns to its normal position after being compressed.

To set the adjusters

The adjusters have a normal right hand thread. Turn the adjuster clockwise to fully closed position (position zero [0]). Then, turn counter clockwise to open, and count the clicks until you reach the recommended number of clicks.

Caution!

Turn gently not to damage delicate sealing surfaces. Tighten with your hand only.

Compression damping adjuster

1. Adjust low speed

To adjust, turn the blue colored adjuster on the side of the cylinder head. Turn clockwise to increase damping, turn counter clockwise to decrease.

2. Adjust high speed

To adjust, turn the black colored adjuster on the side of the cylinder head.

Position	
I	soft
II	medium
III	hard

Note!

For certain models the third position is a pedal platform and will thus increase the damping substantially. This position is only recommended for prolonged climbs or stretches of transportation to the trail head.

Rebound damping adjuster

3. Adjust rebound

Turn the gold colored adjuster on the end eye/ bracket. Turn clockwise to increase damping, turn counter clockwise to decrease.

Note!

The rebound adjuster is designed to compensate for temperature changes, the number of clicks may differ slightly between a cold and a warm shock absorber. The recommended setting applies for room temperature.

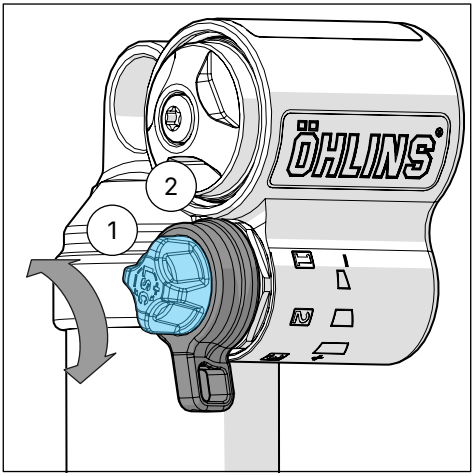

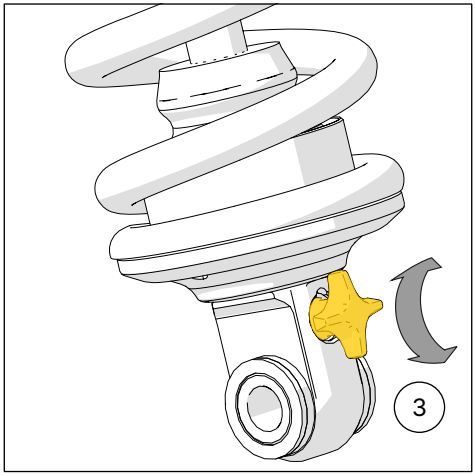

SETTING UP YOUR BIKE

⚠ Warning!

Before you ride, always make sure that the recommended settings set at delivery from Öhlins are intact. Adjust in small steps, take notes and make only one adjustment at a time.

Setting sag and preload

Setting the sag is a crucial part of setting your bike since it affects the height of the bike and the fork angle.

👁 Note!

This procedure must be performed on a flat surface. Do not jump or bounce on your bike as it will result in an inaccurate sag measurement.

1

Push the bump rubber up against the stop cap.

2

Sit carefully on the bike in normal riding position, properly outfitted in your riding gear.

3

Carefully step off the bike and measure the distance between the stop cap and the bump rubber.

Correct sag depends on the bike model and the rider's preferences.

A general guideline for recommended sag is 25-35% of the stroke. For more details contact an authorized service center.

⚠ Warning!

Incorrect spring rate may produce a fork angle that is too steep or too flat. This may give a tendency for over- or understeering, which could seriously affect the handling characteristics of the bike.

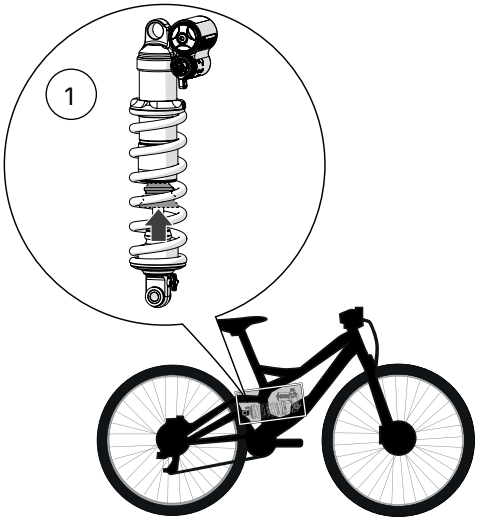

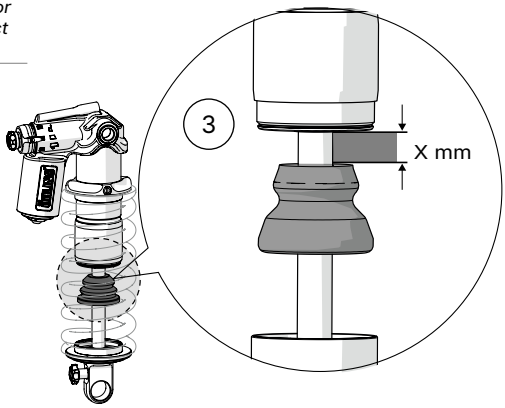

SETTING UP YOUR BIKE

Stability and traction

All bikes are designed with a suspension geometry that include height and fork angle. Changing components may affect this and it is therefore essential that the front and rear ends match each other. Changing to Öhlins suspension gives optimum performance only when both the front fork and the rear suspension interact properly. It is very important that the front and the rear ride heights are within the specified values.

General setup

By adjusting the shock absorber and testing by trial and error you can learn how the different settings affect your bike. Always begin your setup process by taking a test ride with all adjustments at their recommended basic setting. Choose a short run of varying character, for example with long as well as sharp bends, hard and soft bumps. Stay on the same run and adjust only one setting at a time.

When you set up your bike you need to do it together with the front fork and on all types of tracks that you want to optimize, there are no setups that will be 100% perfect on all tracks, compromises need to be made.

Keep priority at

- safe feeling
- stability
- comfort

This will allow you to ride safer, with more confidence and use less energy.

Rebound damping

The rebound adjuster controls the low speed rebound damping.

If the bike feels loose, nervous and is transferring a lot of movement during acceleration and braking and/or if the bike feels nervous over bumpy sections, close the rebound adjuster one click.

If the bike feels hard, harsh (no comfort), packs down under bumps and is difficult to enter corners with or does not stay in line over bumpy sections, open the rebound adjuster one click.

If the bike feels

- unstable
- loose
- bouncy

→ Increase rebound damping

If the bike feels

- hard
- nervous
- low traction

→ Decrease rebound damping

Low speed compression damping

The low speed adjuster is used to control the chassis movement towards the ground.
If you feel that the shock absorber feels soft, spongy, or the bike feels unstable (for example when going into a corner), close two clicks (clockwise).
If you feel that the bike feels hard and has poor traction, open two clicks (counter-clockwise).

High speed compression damping

The high speed adjuster has three positions, I soft, II medium and III hard/pedal platform.

The shocks are delivered with the adjuster set to position II. This is the best all-round set up and has the function that should suit most riders and tracks.

If you feel that the shock absorber is hard and harsh on small bumps and corners and have poor traction for the rear tire, go to position I.

If the bike feels soft, has a low riding position and easily goes through the stroke or bottoms on landing after a jump, work with low speed compression and spring stiffness.

If the bike feels

- soft
- low
- is bottoming

→ Increase compression damping

If the bike feels

- harsh
- hard

→ Decrease compression damping

SETTING UP YOUR BIKE

Preventive maintenance and regular inspection reduces the risk of poor performance. If there is any need for additional service, please contact an authorized service center.

Cleaning

Clean the shock absorber externally with a mild detergent. Use compressed air. Make sure to remove all dirt. Lift the bump rubber and clean the area below. Keep the shock absorber clean and spray it with oil (WD40, CRC 5-56 or equivalent) after washing.

✋ Caution!

Do not spray water directly on the adjuster knobs and/or on the mounting hardware.

Inspection

1. Check the mounting hardware for possible excessive play or stiction.
2. Check the piston shaft for leakage and/or damage.
3. Check the shock absorber body for external damage.
4. Check the rubber components for wear.
5. Check that the screws holding the stop washer (19333-01) still is tighten.
6. Check the attachment points of the shock absorber to the vehicle.

Recommended service intervals

100 hours service or annually.

Disposal

Hand over your discarded Öhlins products to an authorized service center for proper disposal.

👁 Note!

The Öhlins shock absorber must only be filled with Öhlins Shock Absorber Fluid, part no (01304-01). Contact an authorized service center for advice.

⚠ Warning!

Do not change the gas pressure. Proper knowledge, special purpose charging equipment and access to nitrogen is required.

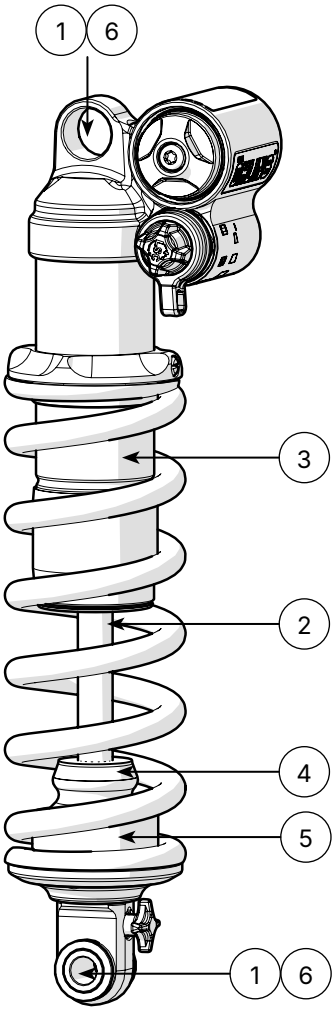

Owner's Manual | Part No. TTX22m.2 | Part No. 07254-05_2 | Issued 2026-05-18 | © Öhlins Group AB

Your Öhlins retailer:

Öhlins Group AB
Box 722
SE-194 27, Upplands Väsby
Sweden

Phone: +46 (0)8 590 025 00
Fax: +46 (0)8 590 025 80
www.ohlins.com

ÖHLINS

ÖHLINS.COM