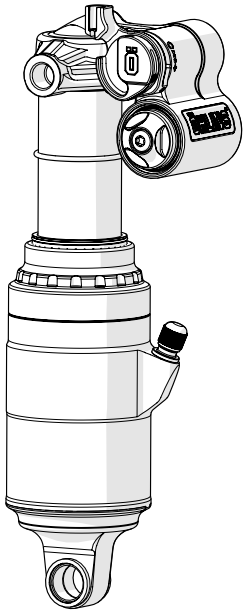

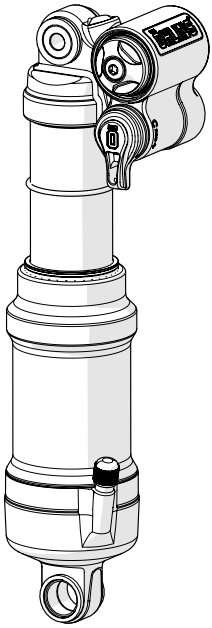

⚠ Warning!

Before installing this product, read this manual. The shock absorber is an important part of your bicycle and will affect the stability.

Note!

Please note that the images in this manual are a general representation of the product and may differ slightly from your product.

Note!

Please note that during storage and transportation, especially at high ambient temperature, some of the oil and grease used for assembling may leak and stain the packaging. This is in no way detrimental to the product, wipe off the excessive oil/grease with a cloth.

Note!

This manual refers to different bikes so pictures might differ from the actual bike but procedure is the same.

Shock absorber

TTXAir m.2

Owner's Manual / Mounting Instruction

ÖHLINS

Öhlins Group AB | Our Story

In the 1970s, a young man named Kenth Öhlin spent most of his free time on the track, pursuing his favorite sport: motocross.

Being a careful observer, there was one detail that kept catching Kenth's attention: motocross bikes had more engine power than their suspension could handle. It wasn't long before Kenth realized that improving the wheel suspension could lead to better overall performance – and the rest is history.

Öhlins was founded in 1976, and just two years later, the company won its first World Championship title. Now, after 50 years in the business, Öhlins is still rooted in motorsport heritage, driven by a passion for performance and innovation.

Developed, Tested, and Perfected for Your Ride

Congratulations on your new Öhlins product! Backed by over 450 World Championship victories and countless other major titles, our products offer proven performance and reliability.

Every Öhlins product undergoes rigorous testing. Our engineers spend thousands of hours developing products, drawing on five decades of racing experience to achieve the perfect balance of precision, durability, and ride quality.

By choosing Öhlins, you've made a clear statement: you're a genuine riding or driving enthusiast who demands the best possible performance from your vehicle. You don't settle for anything less than exceptional handling ability and confidence-inspiring feedback that turns every ride into an experience.

Your Öhlins product is pure racing pedigree, engineered to endure and deliver ultimate comfort and performance – wherever your ride takes you.

SAFETY PRECAUTIONS

General Warnings

Note!

The shock absorber/front fork/steering damper is an important part of the vehicle and will affect the stability.

Note!

Read and ensure you understand the information in this manual and other technical documents provided by Öhlins, before using the product.

Note!

Öhlins Group AB can not be held responsible for any damage to the shock absorber/front fork/steering damper, vehicle, other property or injury to persons, if the instructions for mounting, usage and maintenance are not followed exactly.

⚠ Warning!

After installing the Öhlins product, take a test ride at low speed to ensure your vehicle has maintained stability.

⚠ Warning!

If the suspension makes an abnormal noise, or the function is irregular, or if you notice any leakage from the product, stop the vehicle immediately and return the product to an Öhlins dealer.

⚠ Warning!

The product warranty shall only apply if the product has been operated and maintained in accordance with recommendations in this manual. If you have any questions regarding usage, service, inspection and/or maintenance please contact Öhlins.

⚠ Warning!

This product was developed and designed exclusively for a specific vehicle model and shall only be installed on the intended vehicle model in its original condition as delivered from the vehicle manufacturer.

SAFETY SYMBOLS

In this manual, mounting instructions and other technical documents, important information concerning safety is distinguished by the following symbols:

⚠

The Safety Alert Symbol means: Warning! Your safety is involved.

⚠ Warning!

The Warning Symbol means: Failure to follow warning instructions can result in severe or fatal injury to anyone working with, inspecting or using the shock absorber, or to bystanders.

Caution!

The Caution Symbol means: Special precautions must be taken to avoid damage to the product.

Note!

The Note Symbol indicates information that is important regarding procedures.

Note!

When working with the Öhlins product, always read the vehicle service manual.

Note!

This manual shall be considered as a part of the product and shall accompany the product throughout its life cycle.

⚠ Warning!

This product contains pressurized air. Do not open, service or modify this product without proper education and proper tools. All hydraulic servicing must be completed by an Authorized Öhlins MTB Service Center. All other servicing must be completed by an Authorized Öhlins MTB Service Center alternatively you can conduct the service yourself if you have the necessary skills, genuine parts and tools. In some cases the shock absorber may need to be sent to another region for service.

© Öhlins Group AB. All rights reserved.
Any reprinting or unauthorized use without the written permission of Öhlins Group AB is prohibited.

MOUNTING INSTRUCTIONS

⚠ Warning!

It is advisable to have an Authorized Öhlins Service Centre install the shock absorber.

⚠ Warning!

If the bicycle is mounted in a work stand please make sure to hold the frame when shock is removed to prevent damage to paint and (or) finish.

Note!

Before installing this product clean the bicycle thoroughly.

Note!

When working on this product, always see the bicycle service manual for specific procedures and important data.

Installing your shock

⚠ Warning!

Rear shock setup and configuration varies greatly between different bicycle manufacturers. Be sure to mount the shock according to instructions in the owner´s manual for your bicycle. It is advisible that Öhlins shocks should be installed by an authorized Service center. Improperly installed shocks can fail, causing the rider to lose control, resulting in SERIOUS INJURY OR DEATH.

Install the shock onto your frame using the appropriate hardware. Release the air pressure slowly by using the shock pump. Carefully compress the suspension through its entire travel and make sure that the shock has clearance against the frame at any point. Set sag according to page 4.

Before you ride

Clean the outside of your shock with mild soap and water and wipe dry with a soft rag. Do not use any solvents or de-greasers as these products can damage the shock´s exterior finish.

Do not use a high pressure washer or spray water directly at the seal/shock body junction. Inspect the exterior of your shock. The shock should not be used if any of the exterior parts appear to be damaged.

Contact your local Öhlins dealer for further inspection or repair.

Caution!

Ensure that all screws are tightened to the correct torque and that nothing fouls or restricts movement of the shock absorber when the suspension is fully compressed or extended.

⚠ Warning!

Do not exceed maximum air pressure in the Air spring.
Maximum air pressure:
300 psi for single tube air spring.
325 psi for double tube air spring

Setting up a shock that have the remote kit installed

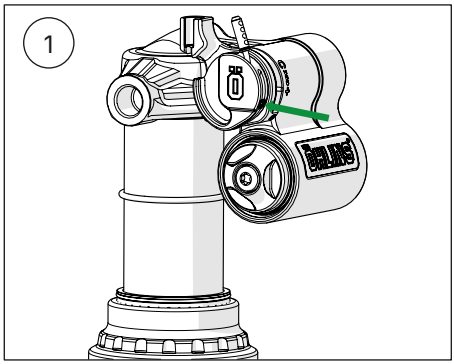

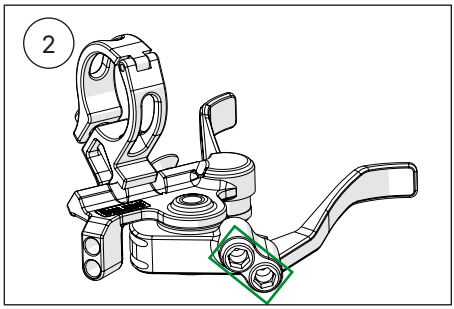

1

Install the remote connection wire with no slack in the system. Use a 2 mm hex torque wrench to tighten the set screw to 0.4 Nm.

2

Use a 5 mm hex key to adjust the pre tension on the wire. Adjust until placing the remote lever in lock out mode results in a stiff feeling in the shock while trying to compress it.

SETTING SAG

Sag set up

Keep track of your personal settings and it is easier to adjust your set up after different type of terrain or to do quick pre-ride control. When controlling pressures be aware that the pump takes up to 10 psi when connected. The table below is a guideline but differs slightly for different bikes.

Note!

Make sure the high speed adjuster is in position 1 or 2 while setting sag. Setting sag in position P will result in wrong set up.

1

Use a shock absorber pump to fill up the shock absorber. Start with 170 PSI.

Caution!

Always remove the shock absorber pump before cycling the shock otherwise there is a risk that the pump damages the frame or the shock absorber.

2

Cycle the shock a couple of times to even out the pressure between the air chambers.

3

Set the O-ring (sag indicator) at the position closest to the air sleeve.

4

Dressed in full riding gear assume normal riding position on the bicycle.

5

Step off the bicycle and measure the distance the O-ring (sag indicator) has moved.

General recommendations:

- too little sag: release air
- too much sag: fill up with more air

General recommendations:

Heavy hard charging rider may require less sag while a smoother rider may benefit from more sag. If you have any questions, contact an Öhlins service centre for advice.

If you bottom out too often or don't use the whole stroke length, see page 7 or contact an Öhlins service center for advice.

Recommended sag

The recommended sag is 25-35% of the shock stroke

Example: A 230×60 shock with 30% sag. 0.3×60=18 mm sag.

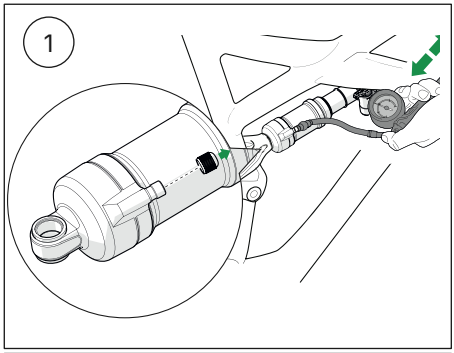

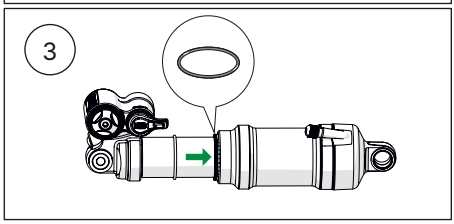

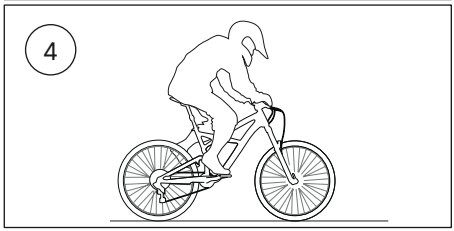

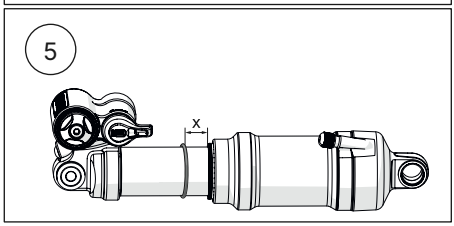

ADJUSTERS

Compression damping controls the energy absorption when the shock absorber is being compressed, thus controls how easily the shock absorber compresses when you hit a bump. Rebound damping controls the energy absorption when the shock absorber is being extended and controls how fast the shock absorber returns to its normal position after being compressed.

To set the adjusters

The adjusters have a normal right hand thread. Turn the adjuster clockwise to fully closed position (position zero [0]). Then, turn counter clockwise to open, and count the clicks until you reach the recommended number of clicks. For low speed compression and rebound use a 3 mm allen key to adjust.

Caution!

Turn gently not to damage the adjusters. The end positions have a distinct stop. Do not use force to turn the adjusters further, this will damage the adjusters and can lead to oil leakage.

Compression damping adjuster

1. Adjust low speed

To adjust, turn the adjuster placed in the center of the blue coloured part on the side of the cylinder head. Turn clockwise to increase damping, turn counter clockwise to decrease.

2. Adjust high speed

To adjust, turn the black coloured adjuster on the side of the cylinder head.

Position	
1	Soft
2	Medium
P	Pedaling platform

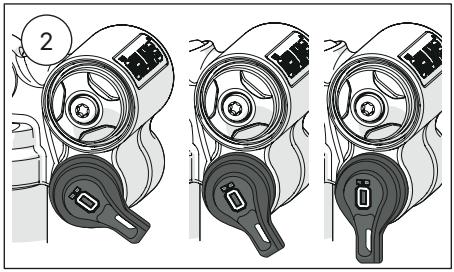

For the remote version push the lower remote lever to increase damping, push the upper remote lever to decrease.

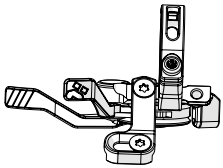

Rebound damping adjuster

3. Adjust rebound

Turn the adjuster placed in the center of the gold coloured nut on the side of the cylinder head. Turn clockwise to increase damping, turn counter clockwise to decrease.

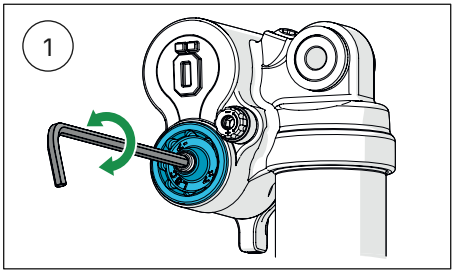

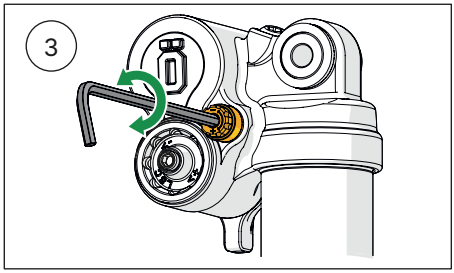

SETTING UP

Stability and traction

All bicycles are designed with a suspension geometry that include height and fork angle. Changing any components may affect the suspension geometry and it is therefore essential that the front and rear ends match each other. Changing to Öhlins suspension gives optimum performance only when both the front fork and the rear suspension interact properly. It is very important that the front and the rear ride heights are within the specified values.

General setup

By adjusting the shock absorber and testing by trial and error you can learn how the different settings affect your bicycle. Always begin your setup process by taking a test ride with all adjustments at their recommended basic settings. Choose a short run of varying character, for example with long as well as sharp bends, hard and soft bumps. Stay on the same run and adjust only one setting at a time.

When you set up your bicycle you need to do it together with the front fork and on all types of tracks that you want to optimize, there are no setups that will be 100% perfect on all tracks, some compromises will need to be made.

Alwsys keep priority at

- safe feeling
- stability
- comfort

This will allow you to ride safer, with more confidence and use less energy.

Adjustment range

The TTX shock is designed for use within the full adjustment range, and using the shock fully open or closed is normal for some riders.

Rebound damping

If the bike feels loose, nervous over bumpy sections and kicking in jumps, close the rebound adjuster one click.

If the bicycle feels hard, harsh (no comfort), packs down under bumps and is difficult to enter corners with or does not stay in line over bumpy sections, open the rebound adjuster 1 click.

If the bicycle feels

- unstable
- loose
- bouncy

→ Increase rebound damping

If the bicycle feels

- hard
- nervous
- low traction

→ Decrease rebound damping

Low speed compression damping

The low speed adjuster is used for controlling the rider's body movement.

If you feel that the shock absorber feels soft, spongy, or the bicycle feels unstable (for example when going into a corner), close 1 click (clockwise).

If you feel that the bicycle feels hard and has poor traction, open 1 click (counter-clockwise).

High speed compression damping

The high speed adjuster has three positions, 1 soft, 2 medium and P Pedaling platform.

The shocks are delivered with the adjuster set to position 2. This is the best all-round set up and has the function that should suit most riders and tracks.

When bump absorption and maximum traction is wanted go to position 1.

Position P is for those long climbs where the need for traction is limited and additional platform control helps to gain efficiency.

→

SETTING UP

Air pressure

The correct air pressure and sag is along with the clicks, crucial to find the best set up that suits your riding style. Start with basic sag and go through the adjusters but the adjuster will not fully compensate for a too soft or hard air spring.

Air spring volume adjustments

Adjusting the air spring volume by adding or removing volume spacers/oil affects the ramp characteristics of the spring. Adding spacers/oil will increase the end stroke spring rate and removing them will decrease the rate.

There are two possible ways to alter the air spring progressivity, either by adding oil or volume spacers.

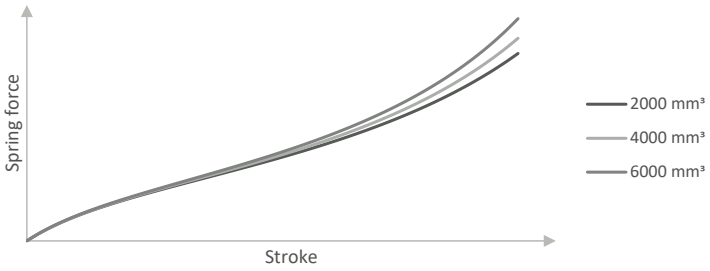

Use The Performance Suspension Guide (PSG) to find the base setup recommendations for number of air spacers and air pressure for your specific bike. Scan the QR code for PSG.

https://www.ohlins.com/performance-suspension-guide/

SETTING UP

TTX1AIR

Note!

Never install more spacers than the specified maximum amount

1
Release the air pressure, check your settings so it is easier to find correct sag.

2
Remove the air sleeve using a rubber strap wrench or specific tool.

3
Pull up the air sleeve.

4
Snap on/remove the volume spacers (2000 mm³) to the spacer holder on the shaft.

5
Each spacer = 2000 mm³. The maximum of spacers on the spacer holder is 5 pcs (10 000 mm³).

6
Push down the O-ring and the spacer holder to the end eye. Assemble the air sleeve and set pressure.

Production setting

MTBM 255X	2000 mm³	Maximum reducer volume allowed: 10 000 mm³

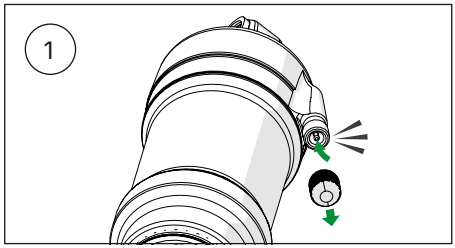

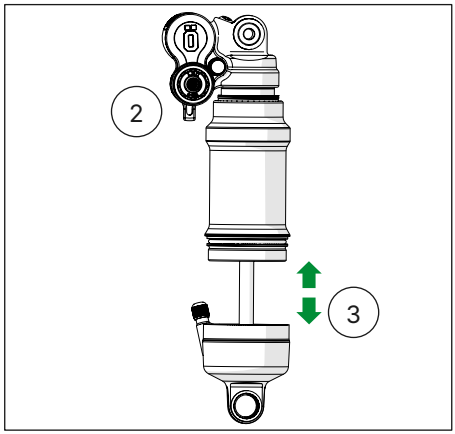

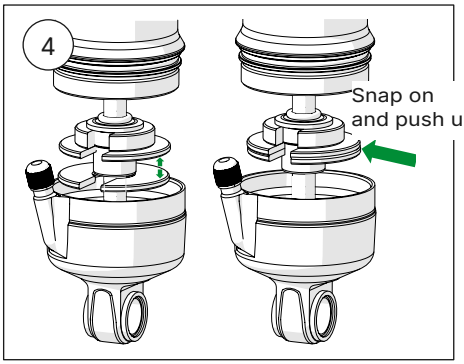

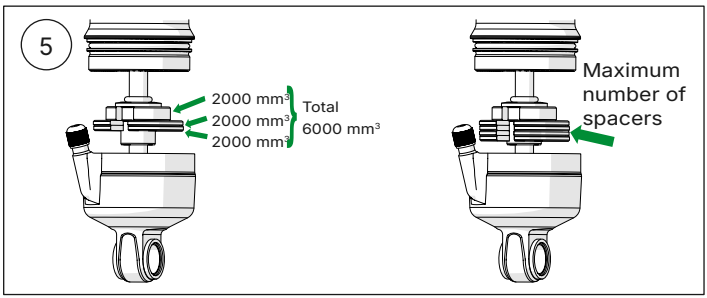

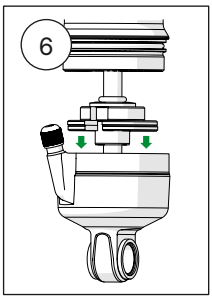

SETTING UP

TTX2AIR

1.
Release the air pressure, check your settings so it is easier to find correct sag.

2.
Remove the air sleeve using an open bottom bracket wrench (for instance Shimano TL-FC32 Bottom bracket tool).

3.
Snap on or remove the spacer.

4.
Pull up the outer air sleeve.

5.
Snap on/remove the volume spacers (2000 mm^3) to the spacer holder on the shaft according to step 4-6 on the previous page.

6.
Each spacer = 2000 mm^3.

7.
Pull down the outer air sleeve. Make sure the tab is placed in the slot on the end eye.

8
Assemble air sleeve and set pressure.

Production setting

MTBM 2565 & MTBM 2585	10 000 mm^3	Maximum reducer volume allowed: 16 000 mm^3
MTBM 2569 & MTBM 2589	12 000 mm^3	Maximum reducer volume allowed: 18 000 mm^3

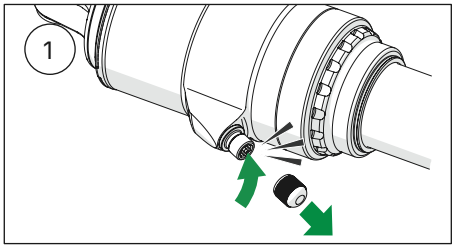

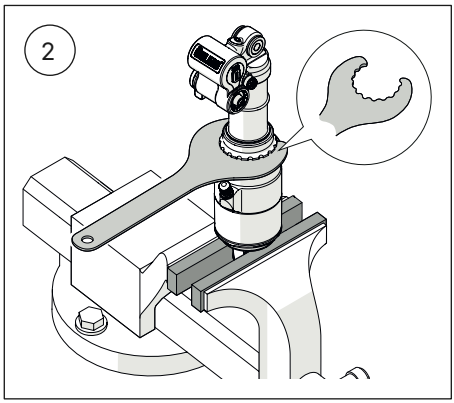

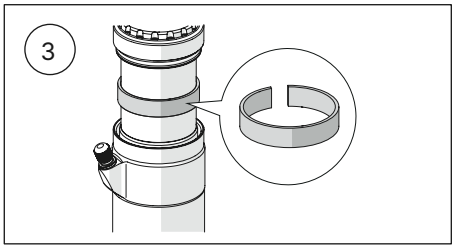

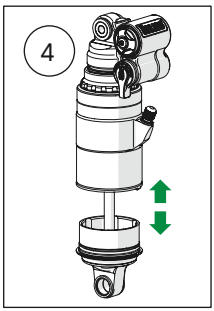

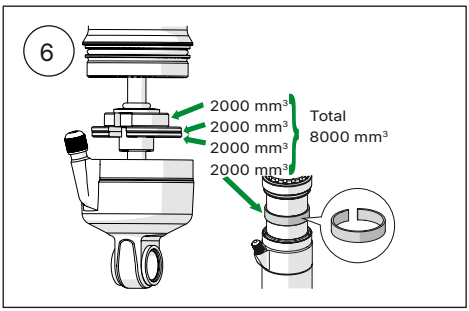

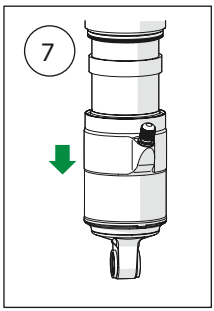

SETTING UP

1
Adding oil is a fast and easy way of altering progressivity and can be done when the shock is still on the bike. Release the air pressure, check your settings so it is easier to find correct sag.

2
Remove the schrader valve core using a proper tool.

3
Add 2 ml of Air spring lube (01337-06 Renep CGLP 220) with a syringe (total oil amount max 4 ml).

4
Mount all parts and set your air pressure.

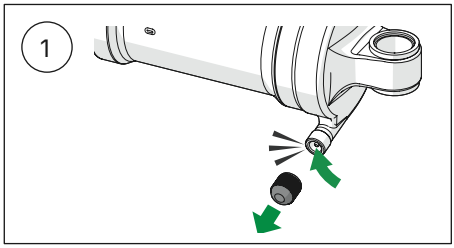

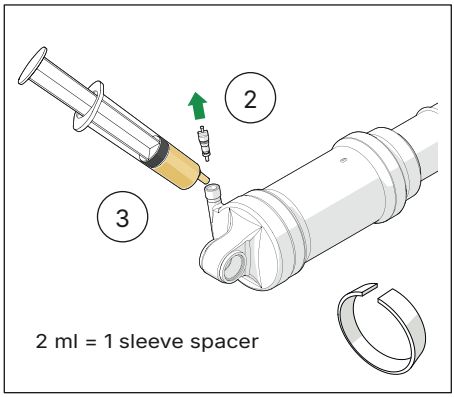

SETTING UP

Stroke adjustment

✋ Caution!

Never use more stroke than what is specified for your bike otherwise there is a risk that you damage the frame or the shock absorber.

⚠ Warning!

Make sure that all pressure is released from the air spring before starting to work on it.

⚠ Warning!

Never install more spacers than the maximum specified amount.

1

Release the air pressure, check your settings so it is easier to find correct sag.

2

Remove the air sleeve using a rubber strap wrench for TTX1Air or an open bottom bracket wrench for TTX2Air.

3

Pull up the air sleeve.

4

Pull up the spacer holder.

5

Snap on the stroke reducer(s) to the shaft under the spacer holder. Each spacer reduces the stroke with 2.5 mm. Use 1, 2 or 3 spacers to reduce the stroke.

6

Make sure the spacer holder encloses the stroke reducers. Push down the shim, O-ring and the spacer holder to the end eye. Assemble the air sleeve and set pressure.

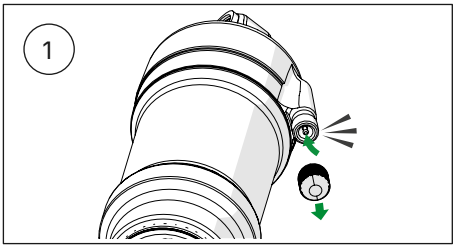

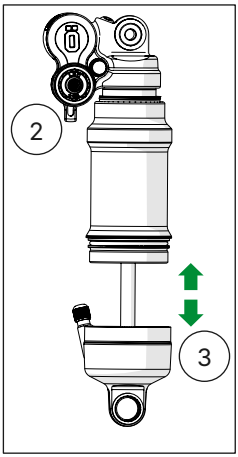

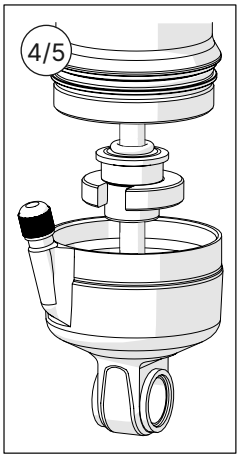

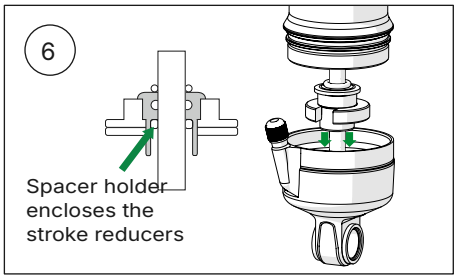

SETUP DATA

⚠ Warning!

Before riding, always make sure that the basic settings are according to recommended Set-up Data. Read about adjustments and setting up in the shock Owner's Manual before you make any adjustments. Contact an Authorized Öhlins Service Centre if you have any questions about setting up.

MAINTENANCE

Maintenance	Interval
Clean dirt and debris from shock absorber	Every ride
Check air pressure and set sag	Every ride
Check torque on shock absorber mounting bolts	Every ride
Air spring service	100 hours/ 1 year

Maintenance	Interval
Damper service	100 hours/ 2 years

Frequent service will keep performance at its best and ensure years of great riding on your Öhlins product. This is minimum service interval recommendation. Riding style, riding conditions and set up have a big impact on service interval. For instance heavy hard charging riders in the bike park needs more frequent service intervals.

Owner's Manual | Part No. OM_07258-18 TTXAir m.2 | Issued 2025-04-17 | © Öhlins Group AB

Your Öhlins retailer:

Öhlins Group AB
Box 722
SE-194 27, Upplands Väsby
Sweden

Phone: +46 (0)8 590 025 00
Fax: +46 (0)8 590 025 80
www.ohlins.com

ÖHLINS

ÖHLINS.COM